TO COMPLETELY REMOVE POWER LIFT CONNECTORS J1 AND J8

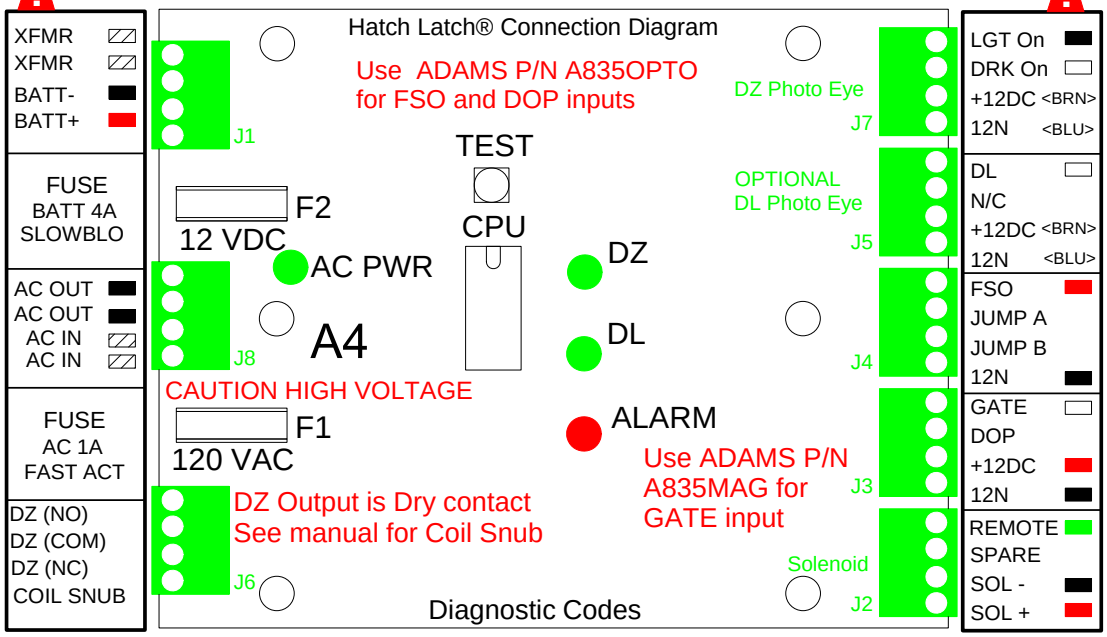

Diagnostic Codes

Processor Failure:	The micro-processor has failed to start - replace PCB	Solid Tone in DZ
Battery Failing:	Battery voltage is lower than system parameters or DC fuse blown (F2)	2 every 15 secs
Solenoid Failure:	Solenoid or cable is damaged, or drive circuitry is not operable.	3 every 15 secs
Sequence Failure:	DL or GATE sensor is active outside of Door Zone.	1 every 10 secs
PCB Control Failure:	Power control switch has failed, replace PCB.	2 every 10 secs
Plunger Motion:	PCB has detected that the plunger is not present or not moving	2 every 5 secs
DZ Photo Eye:	Door zone photo eye has failed	3 every 5 secs
AC Power:	120 VAC power lost or AC fuse has blown. (F1)	1 every 5 secs
Emergency Override:	The Hatch Latch® is on Emergency override, i.e. Receiving a signal from an emergency circuit, via the FSO input.	1 every 15 secs